3rd ANG PROJECTION

ALL DIMS IN MM UNLESS STATED

REV	DESCRIPTION	DATE	APPROVED
1	INITIAL ISSUE	190599	

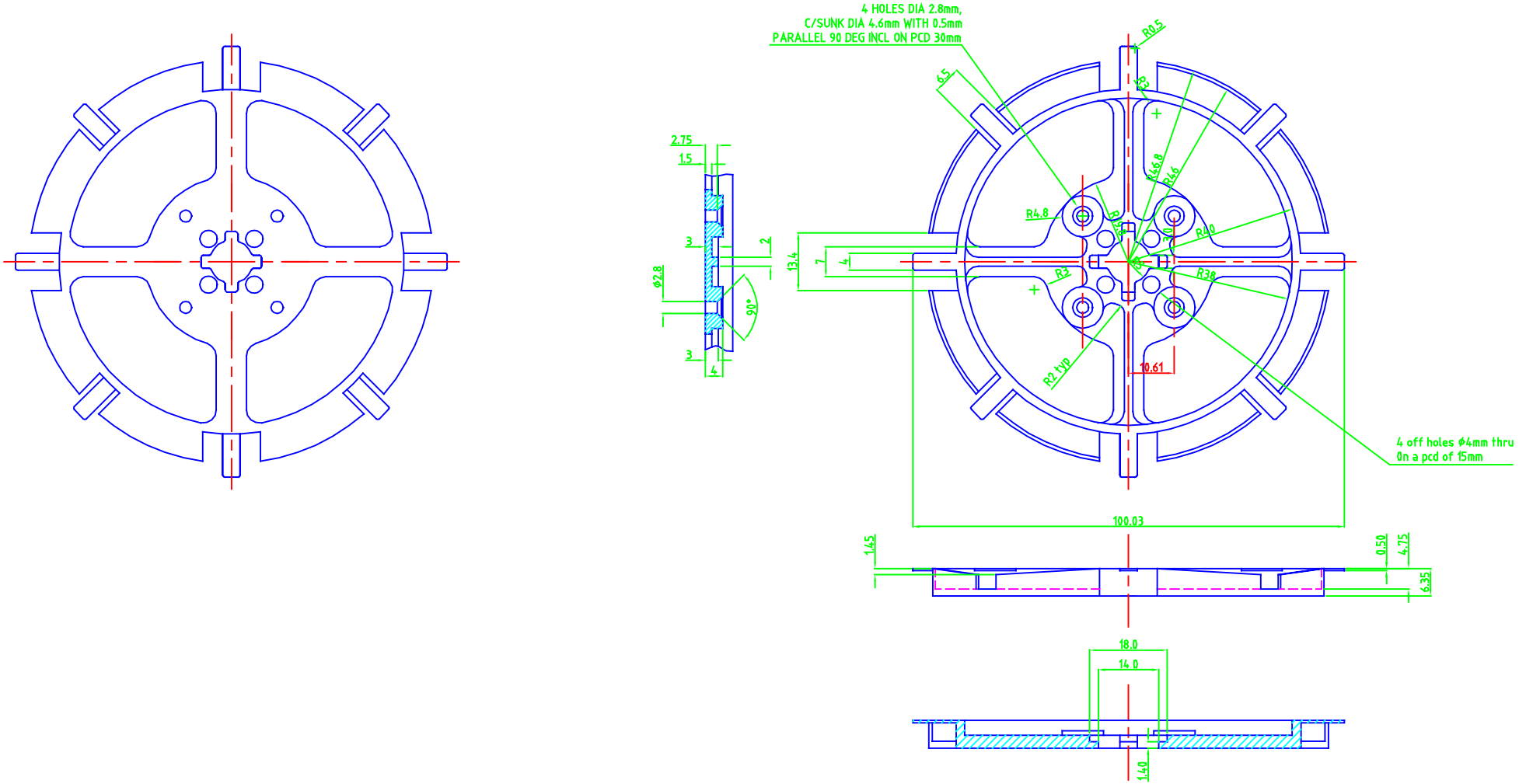

NOTES:

MATERIAL	Sniamid C 50 H2
FINISH	FLASH FREE
ICE No:	3452

GEN TOLS
0 = +/-0.5
0.0 = +/-0.3
0.00 = +/-0.1

EUROPLUS FIBRE OPTICS
Unit 2, Daben Way, Melton, Woodbridge, Suffolk IP12 1RB
Tel: (01394) 386811 Fax: (01394) 380572

DESCRIPTION
FIBRE REEL 40mm RADIUS

THIS DOCUMENT CONTAINS PROPRIETRY INFORMATION WHICH SHALL NOT BE REPRODUCED, TRANSFERRED TO OTHER DOCUMENTS, DISCLOSED TO OTHERS USED FOR MANUFACTURING OR ANY OTHER PURPOSE WITHOUT THE WRITTEN AUTHORISATION OF EUROPLUS FIBRE OPTICS Ltd

DRAWN	CDD	DATE	190599	SIZE	FILE NAME	DWG. No	REV.
CHKD	CDD	DATE			0423001	EFA04 23 001	1
DO NOT SCALE DRAWING		SCALE	1.5:1			SHEET 1 of 1	