3rd ANG PROJECTION

REV	DESCRIPTION	DATE	APPROVED
1	INITIAL ISSUE	051000	CDD

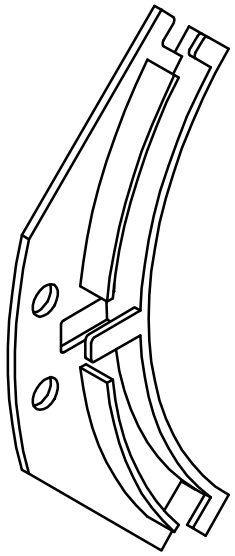

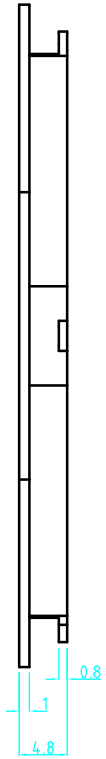

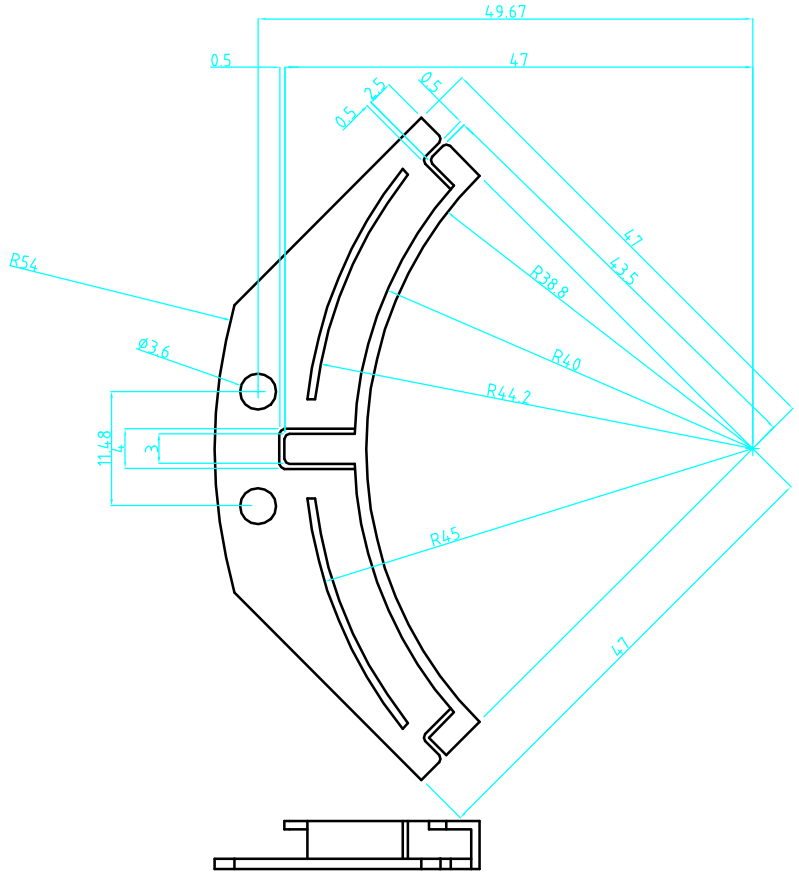

NOTES:

ALL DIMS IN MM UNLESS STATED

GEN TOLS
0 =+/-0.5
0.0 = +/-0.3
0.00 = +/-0.1

EUROPLUS FIBRE OPTICS
Europlus House, Thompson Drive, Anglia International Airpark, Rendlesham, Suffolk, IP12 2RQ. Tel: (01394) 445100 Fax: (01394) 445109

MATERIAL	Sniamid	THIS DOCUMENT CONTAINS PROPRIETRY INFORMATION WHICH SHALL NOT BE REPRODUCED, TRANSFERRED TO OTHER DOCUMENTS, DISCLOSED TO OTHERS USED FOR MANUFACTURING OR ANY OTHER PURPOSE WITHOUT THE WRITTEN AUTHORISATION OF EUROPLUS FIBRE OPTICS LTd	DESCRIPTION	DRAWN CDD	DATE 051000	SIZE	FILE NAME 0434003 3d
FINISH	Flash Free		40mm rad corner guide	CHKD CDD	DATE 051000		DWG. No EFA04 34 003
ICE No:				DO NOT SCALE DRAWING		SCALE 2:1	SHEET 1 of 1

REV. 1