REV	DESCRIPTION	DATE	APPROVED
1	INITIAL ISSUE	280900	CDD

3rd ANG PROJECTION

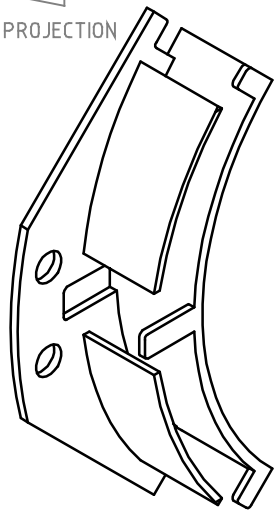

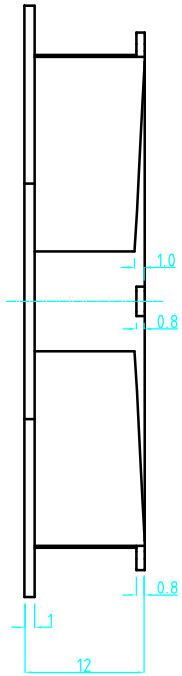

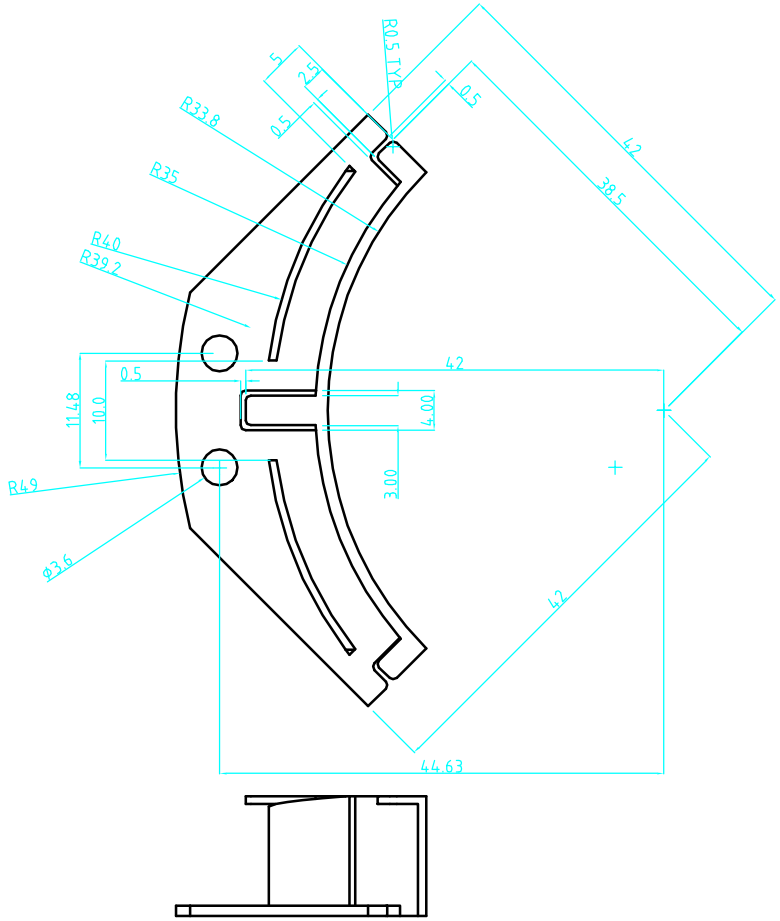

NOTES:

ALL DIMS IN MM UNLESS STATED

GEN TOLS
0 =+/-0.5
0.0 = +/-0.3
0.00 = +/-0.1

EUROPLUS FIBRE OPTICS
Europlus House, Thompson Drive, Anglia International Airpark,
Rendlesham, Suffolk, IP12 2RQ. Tel: (01394) 445100 Fax: (01394) 445109

MATERIAL Sniamid	THIS DOCUMENT CONTAINS PROPRIETRY INFORMATION WHICH SHALL NOT BE REPRODUCED, TRANSFERED TO OTHER DOCUMENTS, DISCLOSED TO OTHERS USED FOR MANUFACTURING OR ANY OTHER PURPOSE WITHOUT THE WRITTEN AUTHORISATION OF EUROPLUS FIBRE OPTICS LTd.	DESCRIPTION	DRAWN CDD	DATE 280900	SIZE	FILE NAME 0434005	DWG No EFA04 34 005	REV 1
FINISH Flash Free		35mm radius x 12mm high corner guide	CHKD CDD	DATE 280900				
ICE No:			DO NOT SCALE DRAWING		SCALE 2:1		SHEET 1 of 1	