3rd ANG PROJECTION

ALL DIMS IN MM UNLESS STATED

REV	DESCRIPTION	DATE	APPROVED
1	INITIAL ISSUE	050201	CDD

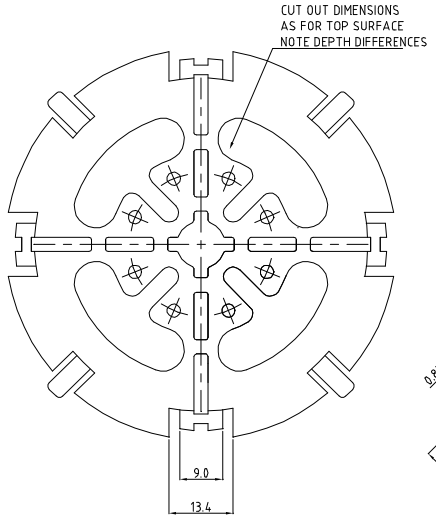

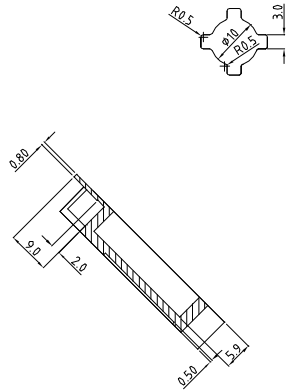

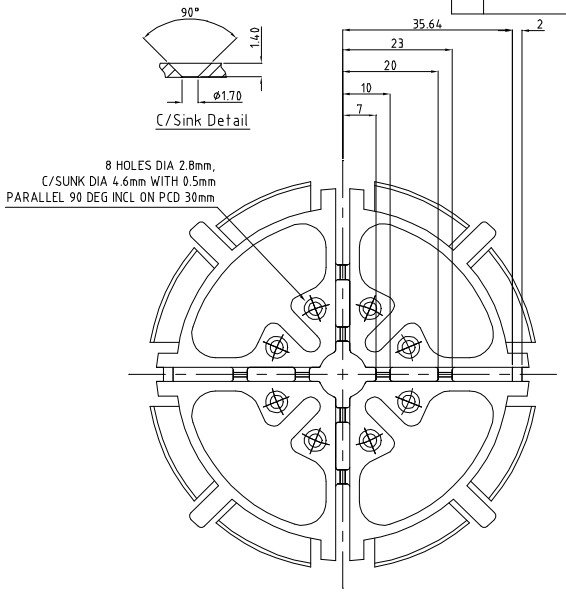

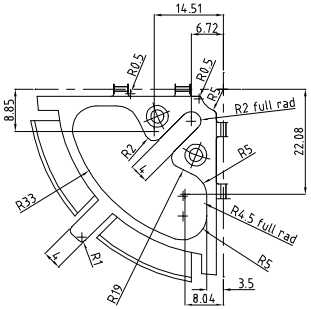

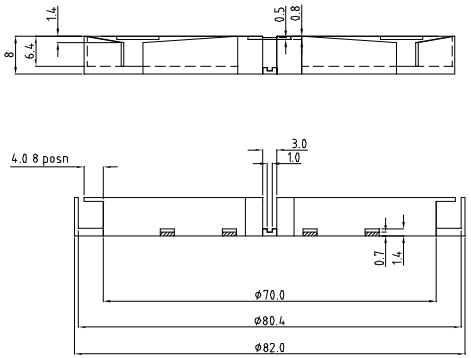

No short shots or incomplete mouldings will be accepted

NOTES: No flashing allowed

MATERIAL Sniamid C 50 H2	GEN TOLS	EUROPLUS FIBRE OPTICS	DESCRIPTION	THIS DOCUMENT CONTAINS PROPRIETRY INFORMATION WHICH SHALL NOT BE REPRODUCED, TRANSFERRED TO OTHER DOCUMENTS, DISCLOSED TO OTHERS USED FOR MANUFACTURING OR ANY OTHER PURPOSE WITHOUT THE WRITTEN AUTHORISATION OF EUROPLUS FIBRE OPTICS Ltd.	DRAWN CDD DATE 050201	SIZE	FILE NAME	DWG. No	REV.
FINISH FLASH FREE	0 = +/-0.5	Unit 2, Deben Way, Melton, Woodbridge, Suffolk IP12 1RB	FIBRE REEL 35mm RADIUS (8mm thick)		CHKD CDD DATE		0476001	EFA04 76 001	1
ICE No:	0.0 = +/-0.3	Tel: (01394) 386811 Fax: (01394) 380572			DO NOT SCALE DRAWING	SCALE 1.5:1		SHEET 1 of 1	
	0.00 = +/-0.1								